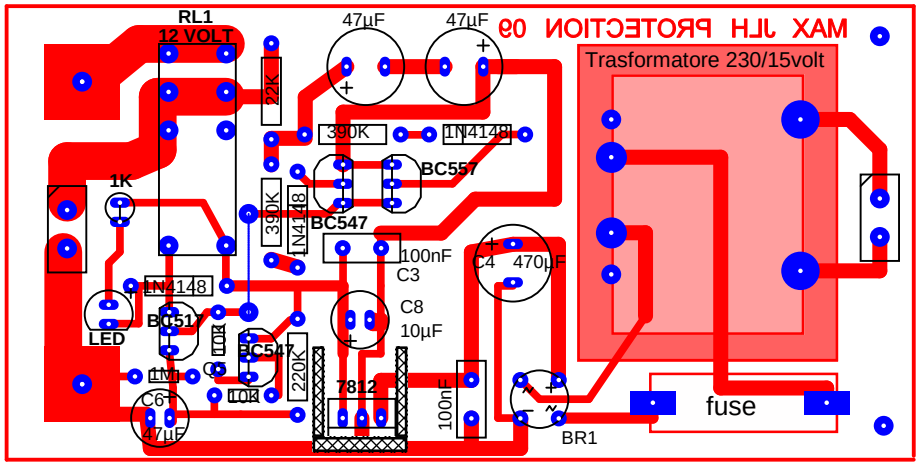
MAX JLH PROTECTION 09
RL1
12 VOLT
47µF
47µF
Trasformatore 230/15volt
22K
390K
1N4148
BC557
1K
390K
1N4148
BC547
100nF
C3
C4
470µF
1N4148
BC517
C8
10µF
LED
BC547
220K
7812
100nF
1M
C6
47µF
10K
10K
BR1
fuse